# TOWN OF DEWEY-HUMBOLDT

"Arizona's Country Town"

**SOLAR PERMIT Application**

Community Development
PO Box 69 - Humboldt, AZ 86329

www.dhaz.gov Phone: 928-632-7362, Fax: 928-632-7365

DATE Submitted: _____ PERMIT # (office):_____ PARCEL # _____

Permit Type: Residential ☐ Other ☐ Project Valuation (LABOR ONLY): $_____

Site Address: _____

Property Owner: _____Applicant: _____

Owner Mailing Address: _____ City/State/Zip: _____

Applicant Email: _____ Applicant Phone: (_____) _____

Project Description:_____Sq. Footage:_____

Is Project being done as Owner Builder? Yes ☐ No ☐

☐ I am the Owner/Builder of the property. I will follow in strict compliance with ARS 32-1121A.5. The property is intended for sole occupancy by the owner, not intended for occupancy by members of the public, owner's employees or business visitors. The structure(s) are NOT INTENDED FOR SALE OR RENT WITHIN 1 YEAR AFTER COMPLETION.

☐ I am the Owner/Developer of the property. I will follow in strict compliance with 32-1121A.6. I will contract with a licensed General Contractor pursuant to this chapter.

*****NOTE: ATTACH A COPY OF THE COUNTY SEPTIC APPROVAL*****

**CONTRACTOR INFORMATION:**

For projects not exempt under ARS 32-1121, the contractor must possess a current and valid Arizona license. The following Contractor information MUST be completed prior to issuance of permit. Is Contractor currently licensed under provisions of ARS 32-1169? Yes ☐ No ☐ Visit roc.az.gov/licensing for contractor license information.

Architect/Engineer: _____ Phone: (_____) _____

Contractor: _____ Phone: (_____) _____

Business Address: _____

City: _____ State: _____ Zip: _____

| ROC #: | Expires: (MO/DA/YR) | Class: | Type: |
|---|---|---|---|
| | | | |

The Town of Dewey-Humboldt does NOT regulate deed restrictions. It is recommended that all applicants check to verify that CC & R's will not be violated by the applicant if this permit is issued. Every permit issued shall become invalid two (2) years from the issue date. The building official is authorized to grant a one (1) time extension of time for a period of up to 180 days. This permit becomes null and void if work or construction authorized is not commenced within 180 days or if construction or work is suspended or abandoned for a period of 180 days at any time after work is commenced. I hereby certify that I have read and examined this application and know the same to be true and correct. All provisions of laws and ordinances governing this type of work will be complied with whether specified herein or not. The granting of a permit does not presume to give authority to violate or cancel the provisions of any other state or local law regulating construction or performance of construction. I acknowledge that I make this statement under penalty of perjury.

I am: Owner: ☐ Contractor ☐ Agent: ☐ Other: _____

_____ _____

Signature of Applicant Date

| | Initials: | Date: |
|---|---|---|
| Zoning Approval: | | |
| PW Approval: | | |
| Flood Control GDP#: | | |
| Plan Check Approval: | | |

| | | | |
|---|---|---|---|
| Payment Date: | | Initials: | |
| Payment Amount: | | | |
| Description: | Deposit ☐ Paid in Full ☐ Check ☐ Cash ☐ CC ☐ | | |
| Receipt #: | | Date permit final: | |

# Checklist for Permit Submission

**Please have all checked components with you when you drop off permit so it can be submitted for review**

| | Residential Building Permit | Manuf. Home Permit | Solar Permit | Grading Permit | Over the Counter Permit (Elec, Plumb, Mech) | Zoning Clearance Permit (Fences, out buildings) |
|---|---|---|---|---|---|---|
| **Signed Permit Application** | X | X | X | X | X | X |
| ***Issued Septic Permit (From Yavapai County)** | X | X | | | | |
| ***Types of Plans:*** | | | | | | |
| • **2 Sets of Full Construction Plans** | X | | X | X | | |
| • **2 AZ Stamped Truss Calculations** | X | | | | | |
| • **2 sets of plans and footings approved by State of AZ Manufactured Housing** | | X | | | | |
| • **1 Plot Plan 8 ½ ” x 11”** | X | X | X | X | X | X |
| • **2 Site Plan 18” x 24” (Min size)** | X | X | X | | | |
| **Affidavit of Site Soil** | X | X | | X | | |
| **Soils Report** | X (possibly) | X (possibly) | | X (possibly) | | |
| **Directions to Site** | X | X | X | X | X | X |
| **Residential Outdoor Lighting** | X | X | | | | |
| **Deposit or One time fee** | X | X | X | X | X | X |

If you are uncertain what is needed, please call us, we would be happy to help.

*Yavapai County handles all Septic Permits. We are unable to start the approval process of any residential plans until we know where the approved septic system will be located and its size.

# FOR SOLAR INSTALLER USE
## SUBMITTAL & REVIEW CRITERIA

All Project Applications must contain the following:

**Submittal Requirements:**

1. Permit information sheet
2. 8 ½" X 11" Plot Plan drawn to scale
3. Directions to Site Map
4. Plans as defined below

*All submittals shall be site specific and designed to the provisions of the 2006 National Electrical Code (Electrical design), the 2012 International Residential Code and 2012 International Building Code (Structural design), and the 2012 International Fuel Gas Code (Gas piping) as adopted by the Town of Dewey-Humboldt.*

MINIMUM CONTENT REQUIREMENTS FOR PLAN SUBMITTAL:

**General:**

- Any system over 10Kw requires approval from APS prior to issuance/final
- Three (3) sets of plans, minimum sheet size (suggest preferred size 18" x 24") that are site specific for the project**. Six (6) sets of plans required for a commercial solar project.
- Plans shall be legible and clearly indicate the entire scope of proposed work**
- Provide an itemized list of components with cost break down including a separate line item for total labor/installation cost**
- In certain situations, additional information, and/or engineering may be required**

**Site Plan: (SEE SAMPLE SITE PLAN)**

- Single sheet site plan, minimum sheet size (suggest preferred size 18" x 24") clearly indicating the location(s) of all equipment**
- The type/use of each structure on which the system is to be mounted or contained within: dwelling, garage, storage building, manufactured home, etc.**
- Indicate the distance between structures and to solar system(Voltage drop)

**System Components:** **

- Provide manufacturer's specifications for ALL system components: solar panels, inverters, controllers, disconnects, junction boxes, panel boards, etc. (Manufacturers Installation instructions shall be on site at time of inspection)
- The manufacturer's specifications shall clearly indicate the specific model to be used
- The manufacturer's specifications shall include the approved testing laboratory listing: Underwriters Laboratories (UL), ELT Testing Laboratories, Inc. (ETL), or Canadian Standards Association (CSA) and listing number for each component. NOTE: ONLY listed/labeled components will be permitted

**Array Drawing: (SEE SAMPLE ARRAY DRAWING)**

- Drawing shall specify the number of modules in series or in parallel for each array and total number of arrays
- Include the operating voltage, operating current, maximum system voltage, and short-circuit current
- Indicate the specific make and model of modules(s). These shall correspond with the provided manufacturer's specifications
- Indicate wire size (AWG), type, insulation type, number of wires, conduit size & type and burial depth

**One (1) – Line Electrical Diagram: (SEE SAMPLE ONE (1) – LINE DIAGRAM)**

- One (1) Line Electrical Diagram must be prepared by a Licensed Electrical Contractor or Engineer
- The wiring line diagram shall include all wire sizes (AWG), type, insulation type, number of wires and conduit size & type
- All equipment/components shown identifying specific make and model shall correspond with the provided manufacturer's specifications

- All required notes regarding Labeling and Warning Signage shall be in accordance with NEC, all applicable requirements of the utility company (APS), and the local authority having jurisdiction (See sample one (1) – and three (3) – line diagrams)
- Include the KW output, all disconnects, operating voltage, operating current, maximum system voltage, and short-circuit current
- Indicate size of main electrical panel and specify any panel replacements or upgrades, (i.e., 200 Amp to 400 Amp)

**Three (3) – Line Electrical Diagram: (SEE SAMPLE THREE (3) – LINE DIAGRAM)**

- Three (3) Line Electrical Diagram must be prepared by a Licensed Electrical Contractor or Engineer
- The three (3) – line electrical diagram shall include all the same information required on the above one (1) – line diagram

**Systems with Batteries and/or Generator Power Backup:**

- Provide the manufacturer's specifications for the specific type, brand and model of batteries
- The plans shall include the number of batteries to be used and a floor plan of the battery storage location. Include the type of storage racks and show the working space access to the batteries and ventilation (amount and how being vented)
- The electrical wiring, disconnect types and related wiring connections to the system shall be included on the one (1) – and three (3) – line diagrams (See sample one (1) – and three (3) – line diagrams with a battery system)
- Provide the manufacturer's specifications for the generator. The site plan shall indicate where the generator will be located, the type of fuel storage, and location of fuel storage. Pipe size for LPG or natural gas lines and LPG storage tank size (water gallon capacity) shall also be included on the site plan.
- Include electrical wiring, disconnect types and related wiring connections to the systems, and the transfer switch on the one (1) – and three (3) – line diagrams

**Roof Framing Details: (Required for ANY/ALL roof mounted equipment)** **

- Provide details indicating the type of roof structure system: manufactured trusses, conventional framed system, manufactured roof joist system, metal frame system, etc. Include the sheathing size/type, roof slopes, and type of roof covering materials (shingles/tile, etc.) Low slope roof trusses shall be engineered
- Indicate the size of support members, spacing of members, age of structure (or year built), and span between walls/beams supporting the roof
- Location of all roof vent systems, plumbing or mechanical, in the array area. Vents shall not be covered by arrays
- Indicate the weight of array and all other components (pounds per square foot, load to roof supports). Include all module/array support or tilt systems
- Provide manufacturer's specifications and installation instructions for mounting systems and attachment hardware for the system to be used. NOTE: Engineering may be required to verify resistance of wind uplift on low slope roof with tilt systems and of systems designed to be attached to the roof covering only and not direct to the roof frame members
- Roof mounted systems on Manufactured Mobile Homes, Park Model Units and Factory Built Buildings will require an engineered design and/or specific approval from the manufacturer. Engineering shall include additional loading of inverters if attached to units
- If not using a pre-engineered mounting/rack system, provide an engineered design for the system

**Ground Set Systems:** **

- Indicate the weight of array and all other components. Include all support members and equipment being supported by the foundation/footing
- Provide manufacturer's specifications of attachment hardware for mounting of system to the support members
- If not using a pre-engineered mounting/rack system, provide an engineered design for the foundation/footing system. The design shall include attachment to foundation (anchor bolts, size [diameter]), and number of bolts, embedment depth, size and amount of reinforcement steel, depth and size of foundation/footing

This list is not all inclusive. Additional information and engineering as determined by the Building Official during plan review may be required.

**Applicable to Solar Water Systems.

| REV. | DESCRIPTION | DATE |
|---|---|---|
| C | INITIAL RELEASE NOT FOR CONSTRUCTION | 01-29-07 |

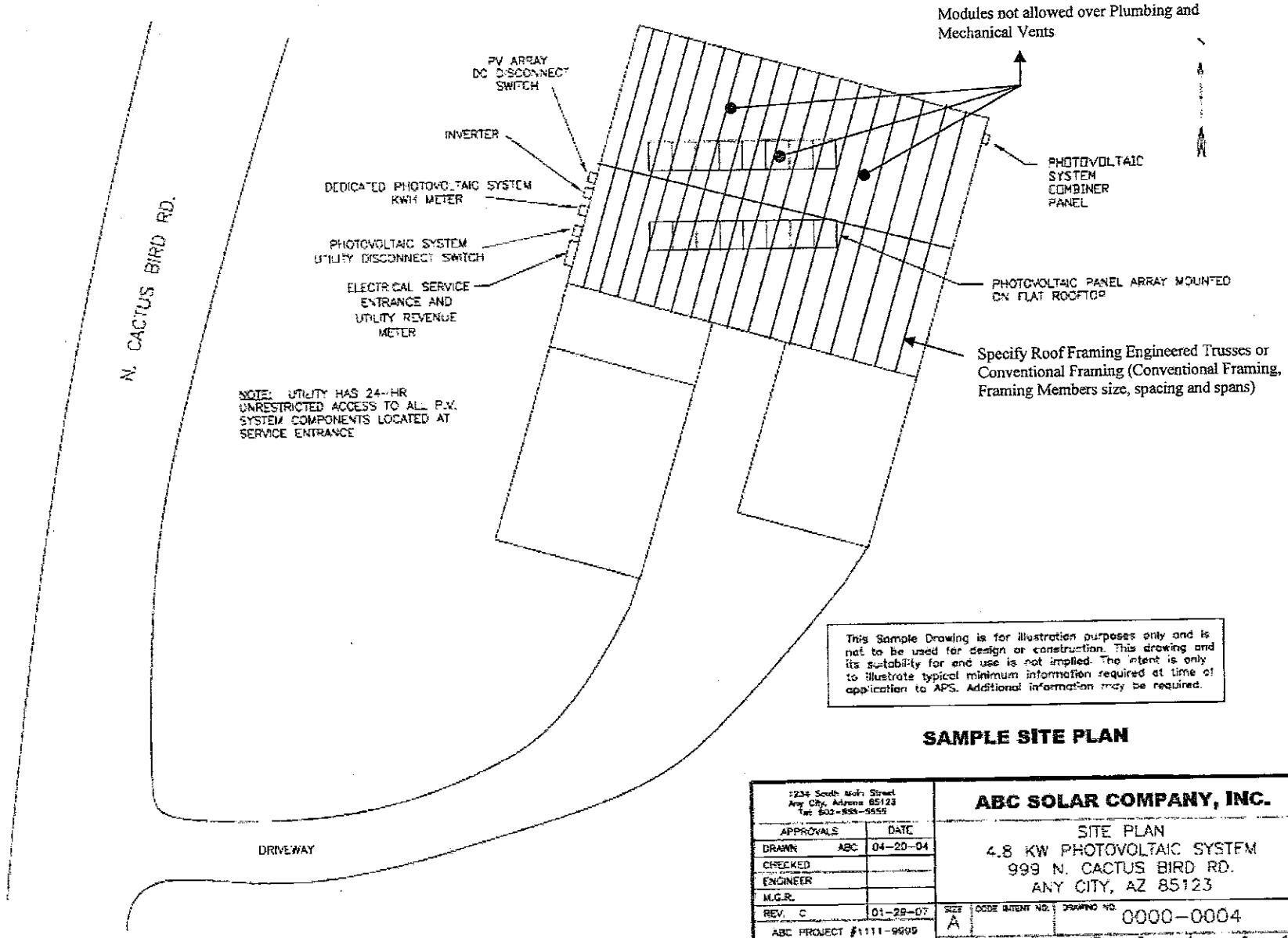


This Sample Drawing is for illustration purposes only and is not to be used for design or construction. This drawing and its suitability for end use is not implied. The intent is only to illustrate typical minimum information required at time of application to APS. Additional information may be required.

## SAMPLE SITE PLAN

| 1234 South Main Street<br>Any City, Arizona 85123<br>Tel 602-555-5555 | | ABC SOLAR COMPANY, INC. | | |
|---|---|---|---|---|
| APPROVALS | DATE | SITE PLAN<br>4.8 KW PHOTOVOLTAIC SYSTEM<br>999 N. CACTUS BIRD RD.<br>ANY CITY, AZ 85123 | | |
| DRAWN ABC | 04-20-04 | | | |
| CHECKED | | | | |
| ENGINEER | | | | |
| M.G.R. | | | | |
| REV. C | 01-29-07 | SIZE A | CODE IMENT NO. | DRAWING NO. 0000-0004 |
| ABC PROJECT #1111-9999 | | SCALE NA | REV. C | SHEET 1 OF 1 |
| DO NOT SCALE DRAWINGS | | | | |

| REV. | DESCRIPTION | DATE |
|---|---|---|
| C | UPDATE ARRAY WATTS TO 2258 | 01-29-07 |

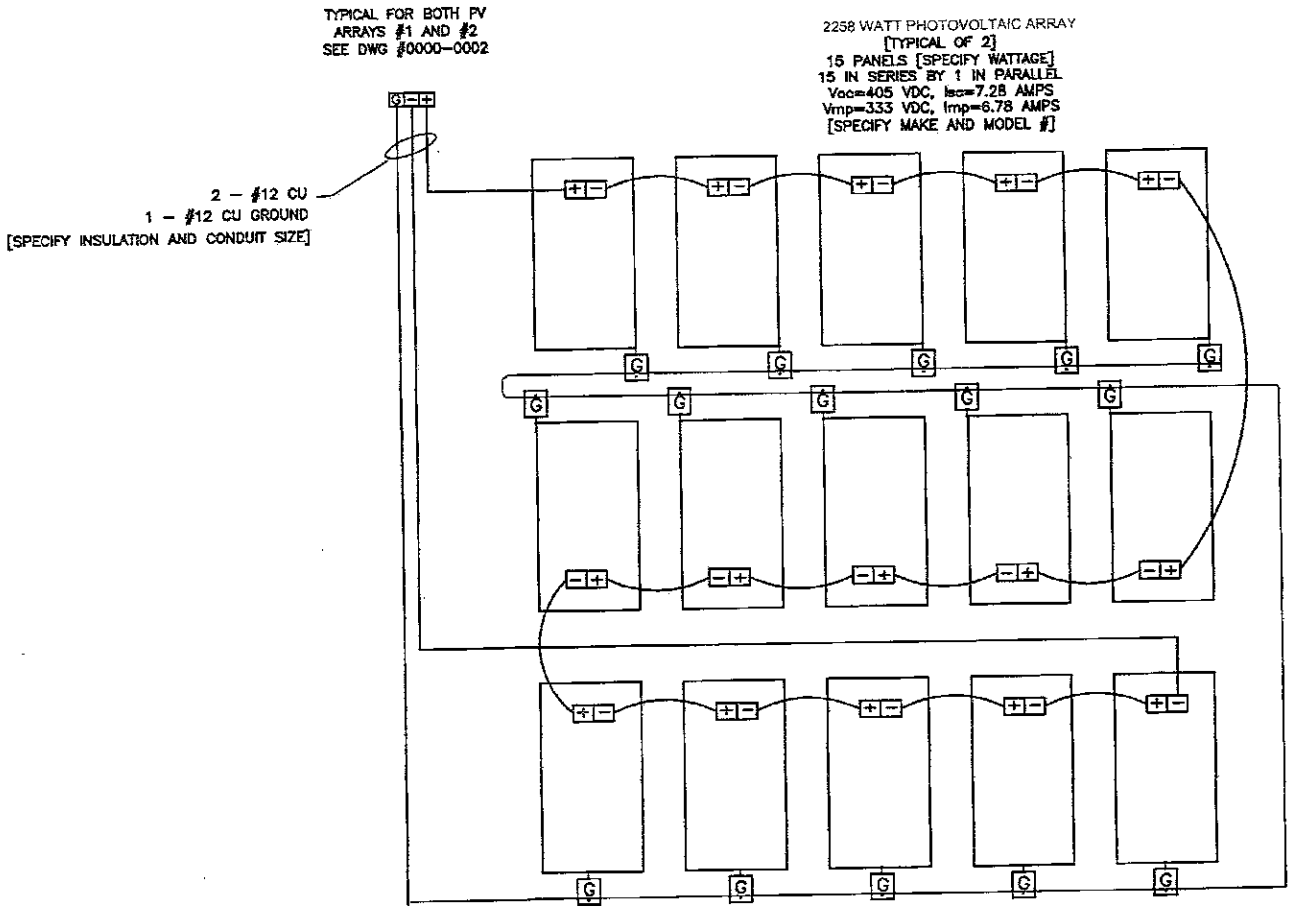


This Sample Drawing is for illustration purposes only and is not to be used for design or construction. This drawing and its suitability for end use is not implied. The intent is only to illustrate typical minimum information required at time of application to APS. Additional information may be required.

## SAMPLE ARRAY DRAWING

NOTES: [TYPICAL]

1. EQUIPMENT SHALL BE INSTALLED IN ACCORDANCE WITH THE NEC AND ALL APPLICABLE REQUIREMENTS OF THE LOCAL AUTHORITY HAVING JURISDICTION.
2. GROUND WIRE MUST BE CONTINUOUS AND INSTALLED TO ALLOW FOR PANEL REMOVAL WITHOUT DISRUPTING CONTINUITY. ALL MODULE GROUND CONNECTIONS SHALL BE MADE IN ACCORDANCE WITH NEC 690-4 (C).
3. FOLLOW MANUFACTURERS SUGGESTED INSTALLATION PRACTICES AND WIRING SPECIFICATIONS.
4. WIRES SHALL BE RATED AND LABELED "SUNLIGHT RESISTANT" WHERE EXPOSED TO AMBIENT CONDITIONS.


1234 South Main Street
Any City, Arizona 85123
Tel: 602-555-5555


| APPROVALS | | DATE |
|---|---|---|
| DRAWN | ABC | 01-30-04 |
| CHECKED | | |
| ENGINEER | | |
| M.G.R. | | |
| REV. C | | 11-10-2008 |

DO NOT SCALE DRAWINGS

**ABC SOLAR COMPANY, INC.**

4516 WATT PHOTOVOLTAIC ARRAY
WIRING DIAGRAM

| SIZE | CODE IDENT NO. | DRAWING NO. |
|---|---|---|
| A | | 0000-0003 |

SCALE NA | REV. C | SHEET 1 OF 1

| REV. | DESCRIPTION | DATE |
|---|---|---|
| E | UPDATE ARRAY WATTS TO 2258 | 03/06/07 |

This Sample Drawing is for illustration purposes only and is not to be used for design or construction. This drawing and its suitability for end use is not implied. The intent is to only illustrate typical minimum information required at time of application to APS. Additional information may be required.

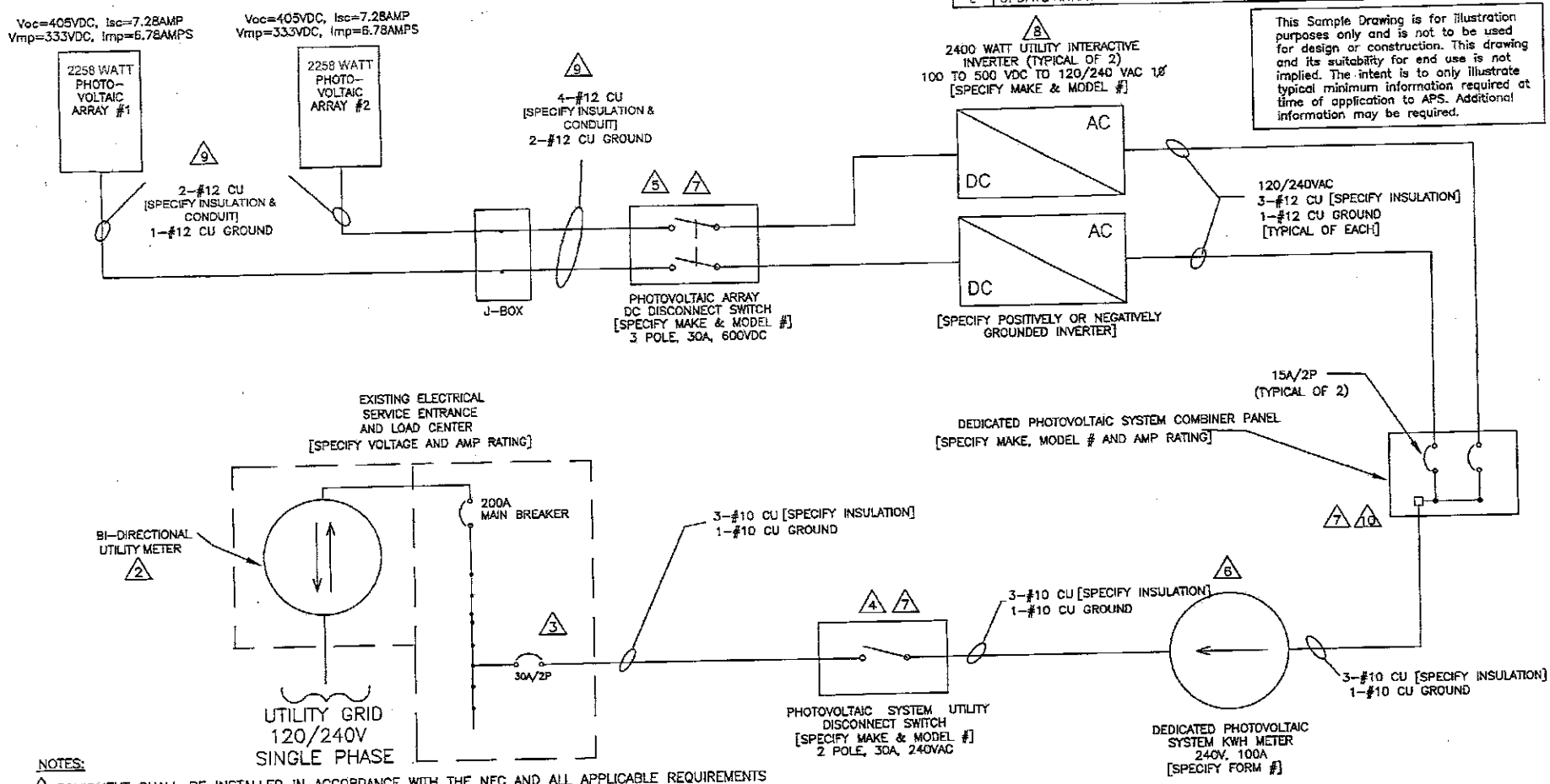


NOTES:

1. EQUIPMENT SHALL BE INSTALLED IN ACCORDANCE WITH THE NEC AND ALL APPLICABLE REQUIREMENTS OF THE SERVING ELECTRIC UTILITY COMPANY AND OF THE LOCAL AUTHORITY HAVING JURISDICTION.
2. BI-DIRECTIONAL UTILITY METER TO BE INSTALLED BY UTILITY COMPANY (WHEN REQUIRED).
3. LABEL BREAKER "PHOTOVOLTAIC ELECTRIC POWER SOURCE" PER NEC 705.10, AND "BREAKERS ARE BACKFED" PER NEC 690.64(b)(5). LABEL WITH THE MAXIMUM AC OUTPUT OPERATING CURRENT AND THE OPERATING VOLTAGE PER NEC 690.54.
4. LABEL "PHOTOVOLTAIC SYSTEM UTILITY DISCONNECT SWITCH". SWITCH COVER TO BE LOCKED AT ALL TIMES. SWITCH TO BE VISIBLE BLADE AND ACCESSIBLE PER UTILITY REQUIREMENTS AND CONFORM TO NEC 705.22.
5. LABEL "PHOTOVOLTAIC ARRAY DC DISCONNECT SWITCH" PER NEC 690.14(C)(2). LABEL WITH OPERATING CURRENT, OPERATING VOLTAGE, MAXIMUM SYSTEM VOLTAGE, AND SHORT CIRCUIT CURRENT PER NEC 690.53. SWITCH TO BE LOCKED PER NEC 690.7(d).
6. LABEL "PHOTOVOLTAIC POWER SYSTEM DEDICATED KWH METER".
7. PROVIDE WARNING SIGN PER NEC 690.17 READING "WARNING—ELECTRIC SHOCK HAZARD—DO NOT TOUCH TERMINALS—TERMINALS ON BOTH LINE AND LOAD SIDES MAY BE ENERGIZED IN THE OFF POSITION".
8. LISTING AGENCY NAMES AND NUMBERS TO BE INDICATED ON POWER INVERTER AND SOLAR MODULES PER NEC 110.3(b).
9. METALLIC CONDUIT SHALL BE USED WITHIN BUILDING PER NEC 690.31 (E).
10. LABEL "DEDICATED PHOTOVOLTAIC SYSTEM COMBINER PANEL" AND "LOADS NOT TO BE ADDED TO THIS PANEL".

# SAMPLE ELECTRICAL ONE - LINE DIAGRAM


1234 South Main Street
Any City, Arizona 85123
Tel: 602-555-5555


| APPROVALS | | DATE |
|---|---|---|
| DRAWN | ABC | 06-29-05 |
| CHECKED | | |
| ENGINEER | | |
| M.G.R. | | |
| REV. E | | 11-10-2008 |
| ABC PROJECT #1111-9999 | | |
| DO NOT SCALE DRAWINGS | | |

**ABC SOLAR COMPANY, INC.**

ONE-LINE ELECTRICAL DIAGRAM
4.8 KW PHOTOVOLTAIC SYSTEM
999 N. CACTUS BIRD RD.
ANY CITY, AZ 85123

| SIZE | CODE INTENT NO. | DRAWING NO. |
|---|---|---|
| A | | 0000-0001 |
| SCALE NA | REV. E | SHEET 1 OF 1 |

| REV. | DESCRIPTION: | DATE |
|---|---|---|
| E | UPDATE ARRAY WATTS TO 2258 | 03/06/07 |

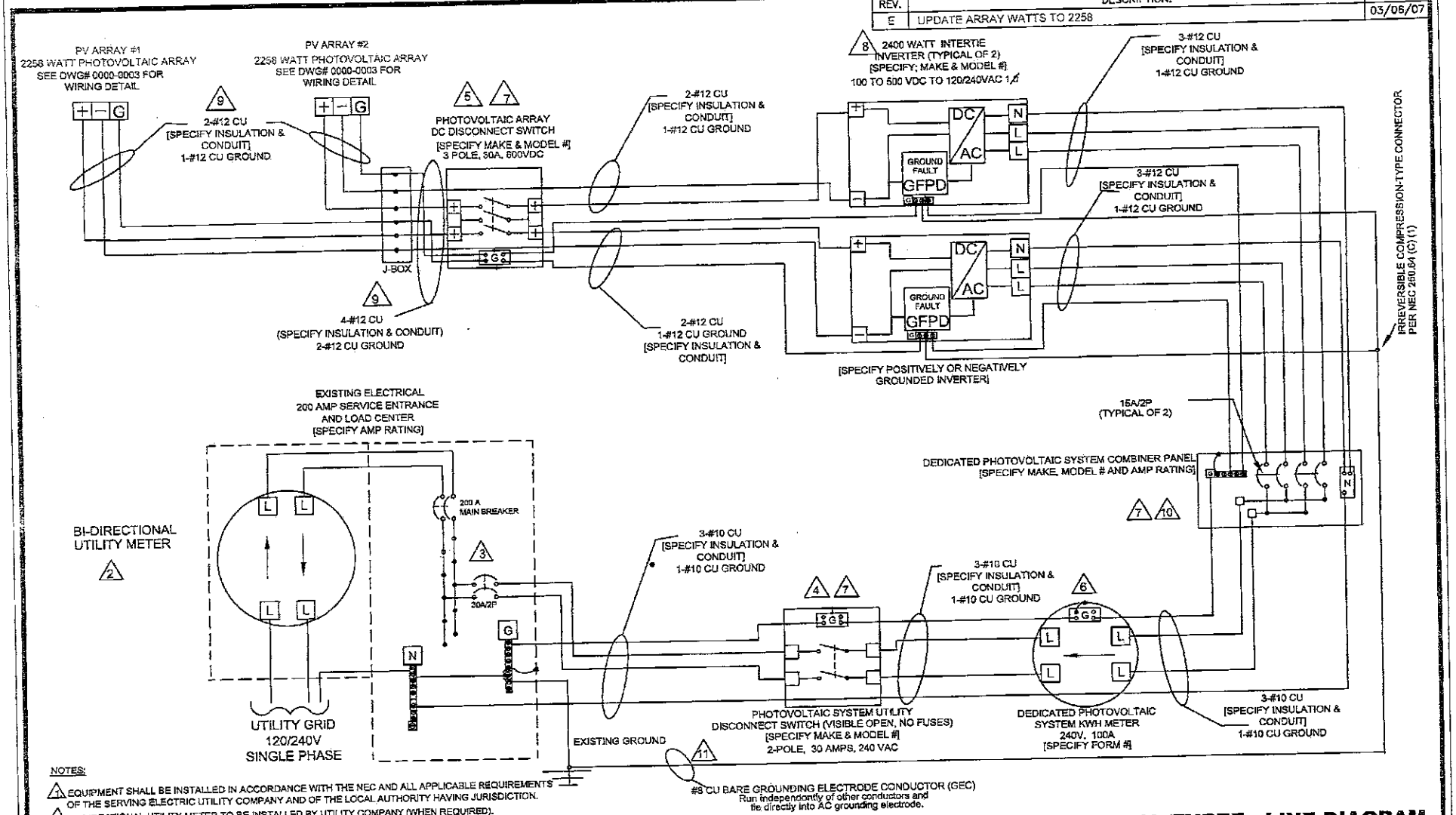


NOTES:

1. EQUIPMENT SHALL BE INSTALLED IN ACCORDANCE WITH THE NEC AND ALL APPLICABLE REQUIREMENTS OF THE SERVING ELECTRIC UTILITY COMPANY AND OF THE LOCAL AUTHORITY HAVING JURISDICTION.
2. BI-DIRECTIONAL UTILITY METER TO BE INSTALLED BY UTILITY COMPANY (WHEN REQUIRED).
3. LABEL BREAKER "PHOTOVOLTAIC ELECTRIC POWER SOURCE" PER NEC 705.10, AND "BREAKERS ARE BACKFED" PER NEC690-64(B)(5). LABEL WITH THE MAXIMUM AC OUTPUT OPERATION CURRENT AND THE OPERATING VOLTAGE PER NEC 690.54.
4. LABEL "PHOTOVOLTAIC SYSTEM UTILITY DISCONNECT SWITCH". SWITCH COVER TO BE LOCKED AT ALL TIMES. SWITCH TO BE VISIBLE BLADE AND ACCESSIBLE PER UTILITY REQUIREMENTS AND CONFORM TO NEC 705.22.
5. LABEL "PHOTOVOLTAIC ARRAY DC DISCONNECT SWITCH" PER NEC 690.14(C)(2). LABEL WITH OPERATING CURRENT, OPERATING VOLTAGE, MAXIMUM SYSTEM VOLTAGE, AND SHORT CIRCUIT CURRENT PER NEC 690.53. SWITCH TO BE LOCKED PER NEC 690.7(D).
6. LABEL "PHOTOVOLTAIC POWER SYSTEM DEDICATED KWH METER".
7. PROVIDE WARNING SIGN PER NEC 690.17 READING "WARNING-ELECTRIC SHOCK HAZARD-DO NOT TOUCH TERMINALS-TERMINALS ON BOTH LINE AND LOAD SIDES MAY BE ENERGIZED IN THE OFF POSITON.
8. LISTING AGENCY NAMES AND NUMBERS TO BE INDICATED ON POWER INVERTER AND SOLAR MODULES PER NEC 110.3(B).
9. METALLIC CONDUIT SHALL BE USED WITHIN BUILDING PER NEC 690.31 (E).
10. LABEL "DEDICATED PHOTOVOLTAIC SYSTEM COMBINER PANEL" AND "LOADS NOT TO BE ADDEDD TO THIS PANEL".
11. GEC TO BE INSTALLED AS REQUIRED BY MANUFACTURER INSTRUCTIONS AND NEC 690.47.

This Sample Drawing is for illustration purposes only and is not to be used for design or construction. This drawing and its suitability for end use is not implied. The intent is to only illustrate typical minimum information required at time of application to APS. Additional information may be required.

# SAMPLE ELECTRICAL THREE - LINE DIAGRAM

1234 South Main Street
Any City, Arizona 85123
Tel: 602-555-5555

**ABC SOLAR COMPANY, INC.**

| APPROVALS | | DATE |
|---|---|---|
| DRAWN | ABC | 04-05-05 |
| CHECKED | | |
| ENGINEER | | |
| M.G.R. | | |
| REV. E | | 11-10-2008 |
| ABC PROJECT #1111-9999 | | |
| DO NOT SCALE DRAWINGS | | |

THREE-LINE ELECTRICAL DIAGRAM
4.8 KW PHOTOVOLTAIC SYSTEM
999 N. CACTUS BIRD RD.
ANY CITY, AZ 85123

| SIZE | CODE INTENT NO. | DRAWING NO. |
|---|---|---|
| A | | 0000-0002 |

SCALE NA | REV. E | SHEET 1 OF 1

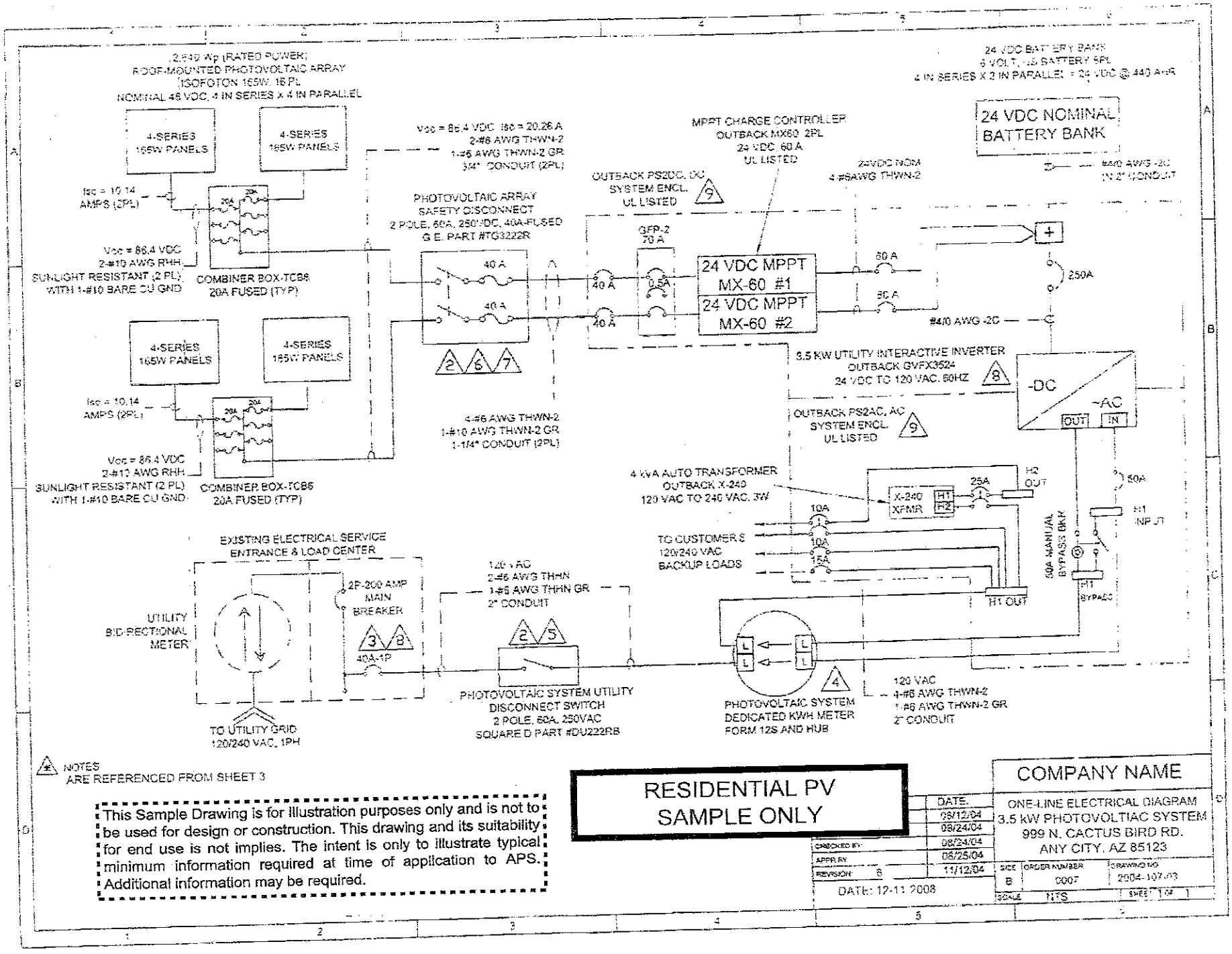
2,640 Wp (RATED POWER)
ROOF-MOUNTED PHOTOVOLTAIC ARRAY
ISOFOTON 165W, 16 PL
NOMINAL 48 VDC, 4 IN SERIES x 4 IN PARALLEL
4-SERIES 165W PANELS
4-SERIES 165W PANELS
Isc = 10.14 AMPS (2PL)
20A
20A
Voc = 86.4 VDC
2-#10 AWG RHH
SUNLIGHT RESISTANT (2 PL)
WITH 1-#10 BARE CU GND
COMBINER BOX-TCB6
20A FUSED (TYP)
4-SERIES 165W PANELS
4-SERIES 165W PANELS
Isc = 10.14 AMPS (2PL)
20A
20A
Voc = 86.4 VDC
2-#10 AWG RHH
SUNLIGHT RESISTANT (2 PL)
WITH 1-#10 BARE CU GND
COMBINER BOX-TCB6
20A FUSED (TYP)
Voc = 86.4 VDC Isc = 20.28 A
2-#6 AWG THWN-2
1-#6 AWG THWN-2 GR
3/4" CONDUIT (2PL)
PHOTOVOLTAIC ARRAY
SAFETY DISCONNECT
2 POLE, 60A, 250VDC, 40A-FUSED
G.E. PART #TG3222R
40 A
40 A
2
6
7
4-#6 AWG THWN-2
1-#10 AWG THWN-2 GR
1-1/4" CONDUIT (2PL)
OUTBACK PS2DC, DC
SYSTEM ENCL.
UL LISTED
9
GFP-2
70 A
40 A
40 A
0.5A
MPPT CHARGE CONTROLLER
OUTBACK MX60 2PL
24 VDC, 60 A
UL LISTED
24 VDC MPPT
MX-60 #1
24 VDC MPPT
MX-60 #2
24VDC NOM
4-#8AWG THWN-2
60 A
60 A
24 VDC NOMINAL
BATTERY BANK
#4/0 AWG -2C
250A
#4/0 AWG -2C
3.5 KW UTILITY INTERACTIVE INVERTER
OUTBACK GVFX3524
24 VDC TO 120 VAC, 60HZ
8
-DC
~AC
OUT
IN
OUTBACK PS2AC, AC
SYSTEM ENCL.
UL LISTED
9
4 KVA AUTO TRANSFORMER
OUTBACK X-240
120 VAC TO 240 VAC, 3W
X-240
XFMR
H1
H2
25A
H2
OUT
50A
H1
INPUT
10A
10A
15A
TO CUSTOMER'S
120/240 VAC
BACKUP LOADS
H1 OUT
50A MANUAL
BYPASS BKR
H1
BYPASS
EXISTING ELECTRICAL SERVICE
ENTRANCE & LOAD CENTER
2P-200 AMP
MAIN
BREAKER
3
8
40A-1P
UTILITY
BIDIRECTIONAL
METER
TO UTILITY GRID
120/240 VAC, 1PH
120 VAC
2-#6 AWG THHN
1-#6 AWG THHN GR
2" CONDUIT
2
5
PHOTOVOLTAIC SYSTEM UTILITY
DISCONNECT SWITCH
2 POLE, 60A, 250VAC
SQUARE D PART #DU222RB
L
L
L
L
4
PHOTOVOLTAIC SYSTEM
DEDICATED KWH METER
FORM 12S AND HUB
120 VAC
4-#6 AWG THWN-2
1-#6 AWG THWN-2 GR
2" CONDUIT
NOTES
ARE REFERENCED FROM SHEET 3
This Sample Drawing is for illustration purposes only and is not to be used for design or construction. This drawing and its suitability for end use is not implies. The intent is only to illustrate typical minimum information required at time of application to APS. Additional information may be required.
RESIDENTIAL PV
SAMPLE ONLY
DATE:
08/12/04
08/24/04
08/24/04
08/25/04
11/12/04
CHECKED BY
APPR BY
REVISION B
DATE: 12-11-2008
COMPANY NAME
ONE-LINE ELECTRICAL DIAGRAM
3.5 kW PHOTOVOLTIAC SYSTEM
999 N. CACTUS BIRD RD.
ANY CITY, AZ 85123
SIZE B
ORDER NUMBER 0007
DRAWING NO 2004-107-03
SCALE NTS
SHEET 1 OF 1

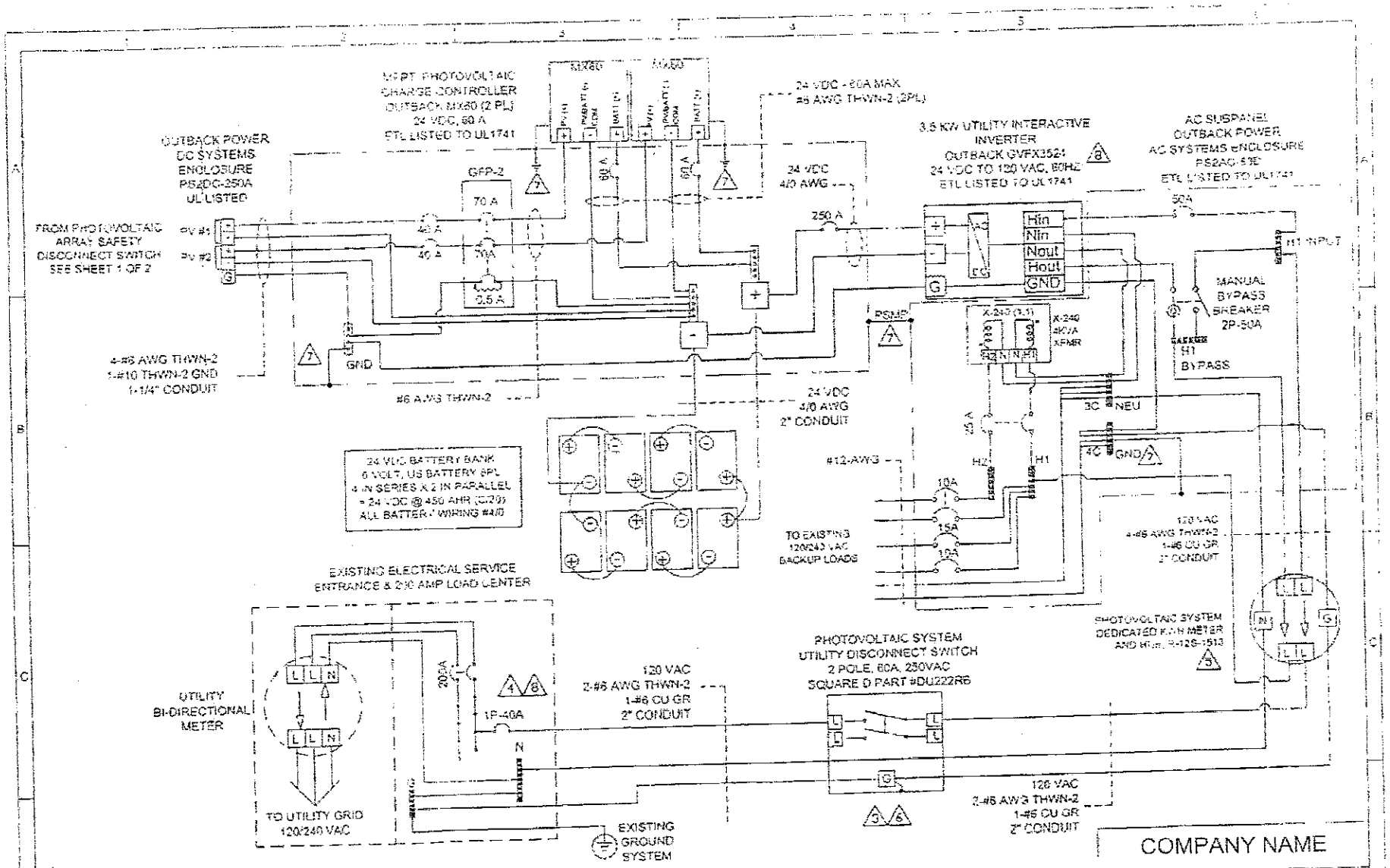


NOTES:

ARE REFERENCED FROM SHEET 3

This Sample Drawing is for Illustration purposes only and is not to be used for design or construction. This drawing and its suitability for end use is not implies. The intent is only to illustrate typical minimum information required at time of application to APS. Additional information may be required.

**RESIDENTIAL PV SAMPLE ONLY**

| APPROVALS | DATE: |
|---|---|
| | 6/12/04 |
| | 8/25/04 |
| | 09/22/04 |
| | 09/22/04 |
| | 11/12/04 |

REVISION: 0

DATE: 12-11-2006

COMPANY NAME

3-LINE ELECTRICAL DIAGRAM
3.5 kW PHOTOVOLTIAC SYSTEM
999 N. CACTUS BIRD RD.
ANY CITY, AZ 85123

| SIZE | ORDER NUMBER | DRAWING NO |
|---|---|---|
| A | 3002 | 2004-107-04 |

SCALE NTS SHEET 2 OF 2

NOTES:

<1> ALL EQUIPMENT SHALL BE INSTALLED IN ACCORDANCE WITH THE NEC AND ALL APPLICABLE REQUIREMENTS OF THE SERVING ELECTRIC UTILITY COMPANY AND OF THE LOCAL AUTHORITY HAVING JURISDICTION (AHJ).

<2> BI-DIRECTIONAL UTILITY METER TO BE INSTALLED BY UTILITY COMPANY.

<3> LABEL BREAKER "PV ELECTRIC POWER SOURCE" PER NEC 705.10 AND "BREAKERS ARE BACKFED" PER NEC 690.64(B)(5). LABEL WITH THE MAX AC OUTPUT OPERATING CURRENT AND THE OPERATING VOLTAGE PER NEC 690.54.

<4> LABEL "PHOTOVOLTAIC SYSTEM UTILITY DISCONNECT SWITCH". SWITCH COVER TO BE LOCKED AT ALL TIMES. SWITCH TO BE VISIBLE BLADE AND ACCESSIBLE PER UTILITY REQUIREMENTS AND CONFORM TO NEC 705.22.

<5> LABEL PER NEC 690.14(C)(2), "PHOTOVOLTAIC SYSTEM DC DISCONNECT SWITCH". LABEL PER NEC 690.53, WITH OPERATING VOLTAGE, OPERATING CURRENT, MAX SYSTEM VOLTAGE, AND SHORT CIRCUIT . SWITCH TO BE LOCKED PER NEC 690.7(D).

<6> LABEL "PHOTOVOLTAIC POWER SYSTEM DEDICATED KWH METER".

<7> PROVIDE WARNING SIGN PER NEC 690.17 READING, "WARNING-ELECTRIC SHOCK HAZARD-DO NOT TOUCH TERMINALS-TERMINALS ON BOTH LINE AND LOAD SIDES MAY BE ENERGIZED IN THE OFF POSITION".

<8> LISTING AGENCY NAMES AND NUMBERS TO BE INDICATED ON POWER INVERTER AND SOLAR MODULES PER NEC 110.3(B).

<9> METALLIC CONDUIT SHALL BE USED WITHIN BUILDING PER NEC 690.31(E).

<10> LABEL "DEDICATED PHOTOVOLTAIC SYSTEM COMBINER PANEL" AND "LOADS NOT TO BE ADDED TO THIS PANEL".

<11> GEC TO BE INSTALLED AS REQUIRED BY MANUFACTURER INSTRUCTIONS AND NEC 690.47.

This Sample Drawing is for Illustration purposes only and is not to be used for design or construction. This drawing and its suitability for end use is not implies. The intent is only to illustrate typical minimum information required at time of application to APS. Additional information may be required.

ABBREVIATIONS

PV = PHOTOVOLTAIC
GEC = GROUNDING ELECTRODE CONDUCTOR

RESIDENTIAL PV
SAMPLE ONLY

| COMPANY NAME | | | | |
|---|---|---|---|---|
| COMPANY ADDRESS Phone # | NOTES<br>3.5 PHOTOVOLTAIC SYSTEM<br>999 N. CACTUS BIRD RD.<br>ANY CITY, AZ 85123 | | | |
| Drawn: | | | | |
| Checked: | | | | |
| Scale: NONE | Drawing No.: 0000-0000 | Sheet: 3 of 4 | Rev: A | Date: 12-11-2008 |

# FOR HOMEOWNER USE
## PLOT PLAN INSTRUCTIONS

www.dhaz.gov Phone: 928-632-7362, Fax: 928-632-7365

***Plot Plans*** must be drawn in black ink and to scale on the 8.5” x 11” form provided
***Site Plans*** (if part of permit package) should be on same size sheet as your construction drawings. Minimum size of 18” x 24”.

Items to be included on Plot or Site plans:

1. Please use Engineering Scale:
   1 inch = 10 feet, 1 inch = 20, etc.
   No smaller than 1 inch = 60 feet
2. Indicate “North” with directional arrow.
3. Property Dimensions.
4. **Proposed** and existing structure(s), labeled, with all dimensions, including pools, fences, sheds.
5. Distances to and between all structure(s) to all property lines.
6. Location of driveway and adjacent streets/roads.
7. Location, size, dimensions of septic system with leach area.
8. Locations of all utility poles, meters, tanks and lines.
9. All easements, regardless of purpose, must be displayed.
10. Slope information; indicate high and low point, using arrows to indicate the direction of slope, and use feet or percent to indicate change in elevation.
11. Any watercourse, including washes, on the parcel or within 200 feet of existing or proposed structure(s); wells within 100 feet of the parcel; and road-cuts within 50 feet of the parcel.

## SAMPLE PLOT PLAN:

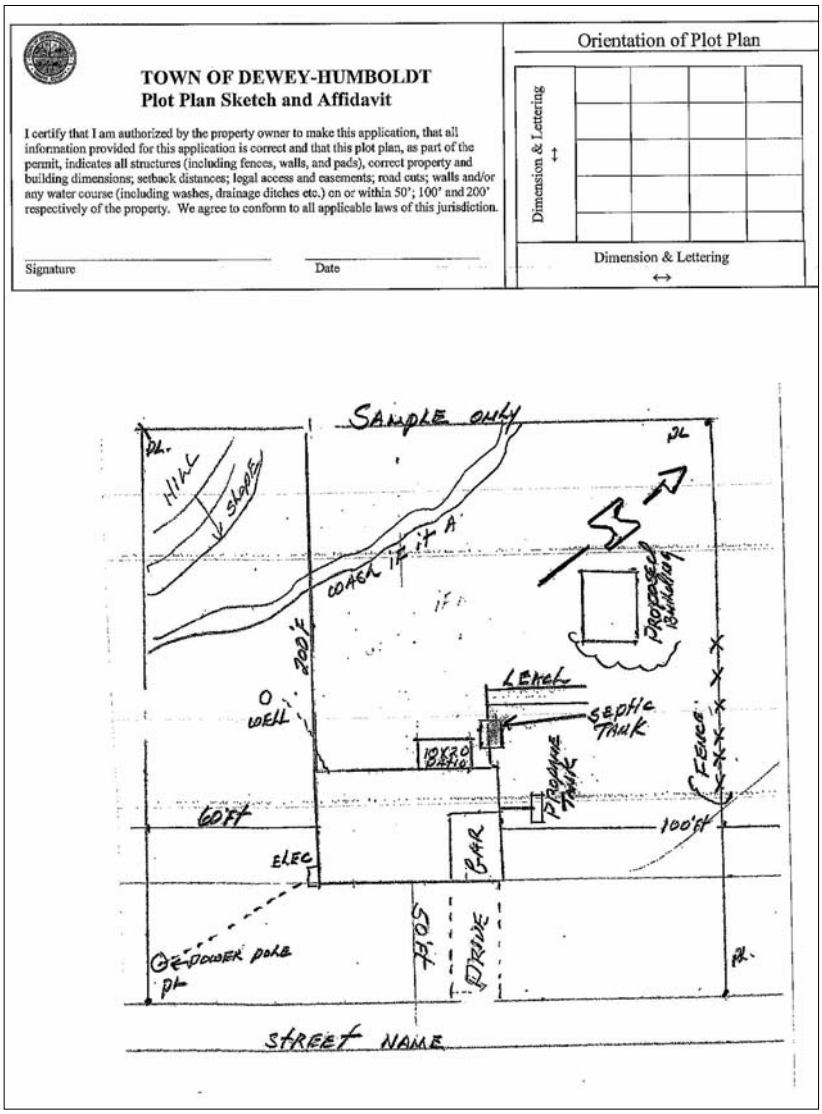


**Site Plans Only**:

1. Must include existing and proposed grades, building pad elevations on all corners, finished floor elevations, drainage, and cut and fill amounts.
2. Indicate ditches, culvert size, perc tests, septic and leach length, slope and valve and inspection pipes, and setbacks.

***Note: If individual wells provide water, maintain minimum septic setbacks of 50' from property lines and 100' from all wells including neighboring wells.*

# TOWN OF DEWEY-HUMBOLDT
## Plot Plan Sketch and Affidavit

I certify that I am authorized by the property owner to make this application, that all information provided for this application is correct and that this plot plan, as part of the permit, indicates all structures (including fences, walls, and pads), correct property and building dimensions; setback distances; legal access and easements; road cuts; walls and/or any water course (including washes, drainage ditches etc.) on or within 50'; 100' and 200' respectively of the property. We agree to conform to all applicable laws of this jurisdiction.

Signature _____ Date _____

Orientation of Plot Plan

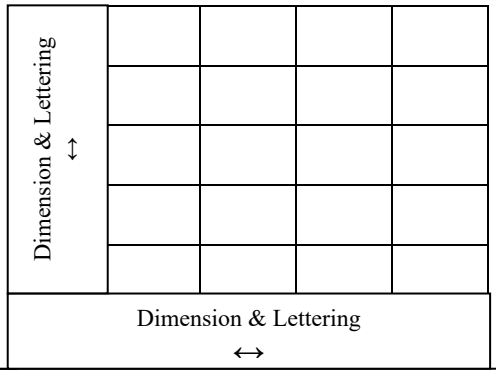


Document #

Sec

Twn

Rng

A P N

Zoning: _____

Stories: _____

Height: _____

Slope: _____%

FY: _____

RY: _____

EY: _____

IY: _____

LC: _____

Lot Area _____

Lot % _____

Density Used: _____

Scale:

North Arrow

MUST BE DRAWN TO SCALE PER CHECKLIST. An additional 8 ½" x 11" sheet may be used to provide an area map for a parcel which exceeds 2 acres or dimensions of 300 feet.

# Town of Dewey-Humboldt

## Directions to Site

- An actual detailed line map is needed, not written instructions.
- Use starting point of Highway 69 (a North to South Rd)
- Make sure **street names** and north arrows **ARE readable**.
- If the map is not adequate it could cause a delay in issuing your permit.

Parcel ID _____Address _____